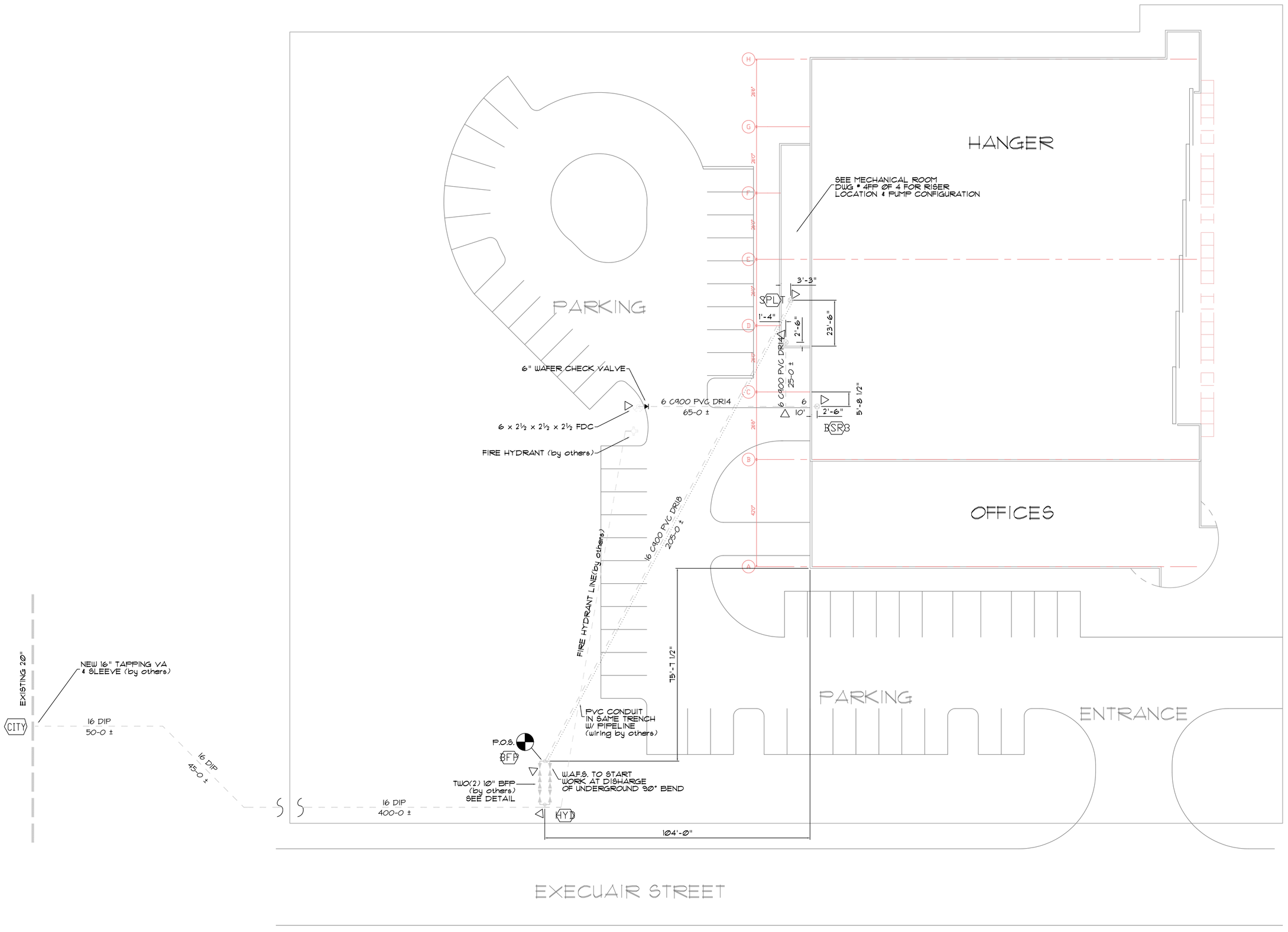

SITE PLAN
SCALE: 1" = 20'-0

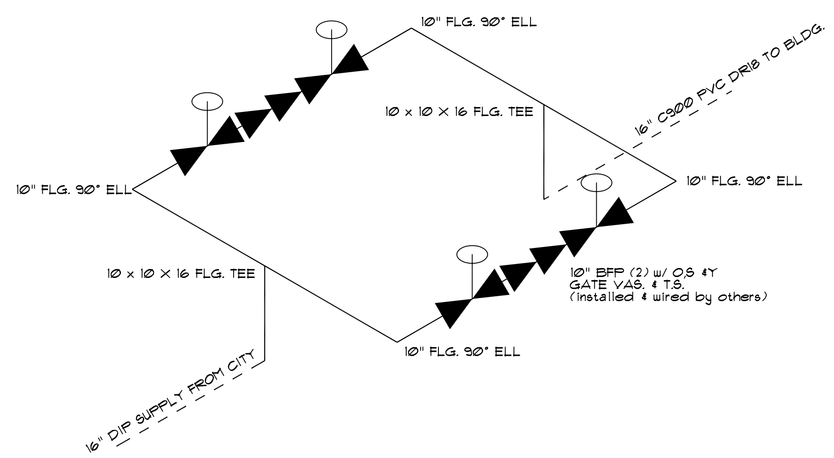

BACKFLOW PREVENTER DETAIL
SCALE: N.T.S.

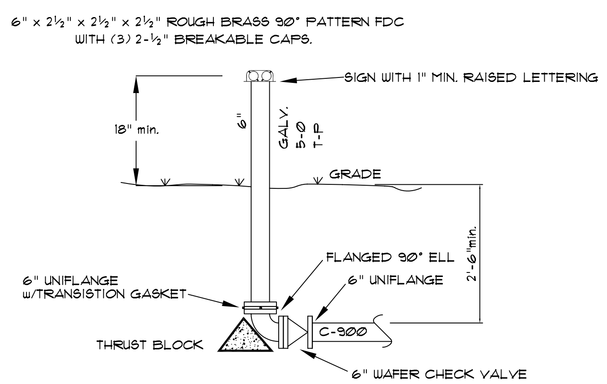

6" YARD FDC DETAIL
SCALE: N.T.S.

NO.	DATE	REVISIONS	BY

WATER SUPPLY INFORMATION			
STATIC PRESSURE	78	FIRE PUMP	
RESIDUAL PRESSURE	55	SIZE GPM @ PSI	4000@100
PITOT READING		TYPE OF DRIVER	ELECTRIC
FLOW IN G.P.M.	3820	ELECTRICAL REQS	
DATE OF TEST	11/14/95		
TIME OF TEST			
TEST TAKEN BY	O.U.C.		
HYDRANT LOCATION			

DESIGN CRITERIA	
SYSTEM NO.	
DESIGN AREA	
DENSITY	
DESIGN AREA S.F.	
PSI REQ'D @ BASR	
GPM REQ'D @ BASR	
NO. SPKR. IN DSGN. AREA	
ELEV. @ HIGHEST SPKR	
INSIDE HOSE	
OUTSIDE HOSE	

SPRINKLERS SPACING			
SYMBOL	MAXIMUM	MINIMUM	COMMENTS

SPRINKLERS					
SYMBOL	QUANTITY	SIZE	K	TEMP	MODEL
TOTAL THIS SHEET					

PROJECT: HANGER
SITE PLAN

CONTRACT WITH:

SYSTEM NO. 1	DATE:
DRAWN BY: DAW	SCALE: 1" = 20'-0"
CHECKED BY:	AHJ:
LISTED BY:	SHEET NO.
CONTRACT NO.	1FP OF 4